Disk Scheduling & I/O Management

Outline

- Disk Arm Scheduling Algorithm
  - FCFS/FIFO
  - SSTF
  - SCAN
  - C-SCAN
  - LOOK
  - C-LOOK
- RAID
- Disk Cache
- I/O Devices
- Organization of I/O functions
- Operating System Design issues
- I/O Buffering

Disk Arm Scheduling Algorithm

Definitions (Internal structure of HDD)

- When the disk drive is operating, the disk is rotating at constant speed.
- To read or write the head must be positioned at the desired track and at the beginning of the desired sector on that track
- Track selection involves moving the head in a movable-head system or electronically selecting one head on a fixed-head system
- On a movable-head system the **time required to move the disk arm to the required track is known as seek time**.
- The **delay waiting for the rotation of the disk to bring the required disk sector under the read-write head is called rotational delay**.
- The **sum of the seek time and the rotational delay equals the access time.**

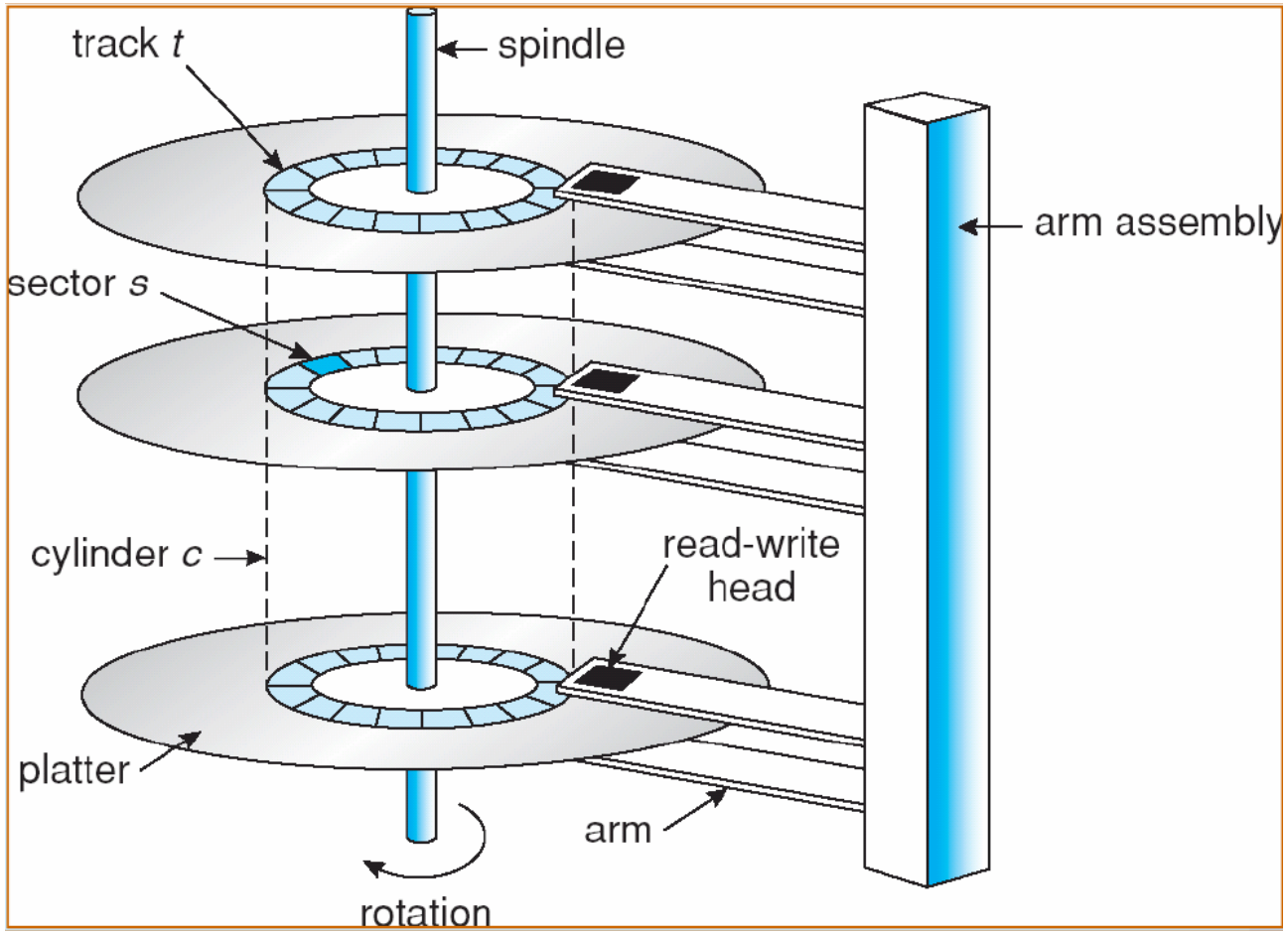

Addressing or Accessing a Sector in Disk

- **Due to vertical numbering, the desired sector is accessed using:**
  - Cylinder no. (By moving the head through the motor)
  - Surface no. (Selection of Head)
  - Sector no. (By rotating the disk using the motor)

Component of Disk Access time:

- **There are three components of disk access time:**
  - **Seek Time (Angular Motion):** It is the time required to move heads from the present cylinder to the required/ addressed cylinder.
  - **Latency Time (Rotation Motion):** Time required to rotate the disk such that the required/addressed sector comes underneath the head.
  - **Transfer time:** It is the byte transfer time of the sector.

Note: Disk Access Time = Seek Time + Latency Time + Transfer Time

Disk Access time: Example

- **Ques. Consider a disk where the average seek time is 80ms. & disk rotation speed is 3000 RPM. Calculate average access time.**

- **Sol.**

  - Average Latency = time taken in 1/2 *rotation time, if the disk rotates in one direction
  - If the disk rotates in both directions, then avg latency = 1/4*rotation time.

  - One rotation time = 60/3000 Sec. = 20ms.

  - Avg Latency = ½ Rotation time = ½*20ms = 10 ms.

  - Access Time = 80 + 10 = 90.

Disk Arm Scheduling Algorithm

- Following are different types of Disk Arm Scheduling Algorithm
  1. FCSC (First Come First Serve) / FIFO (First In First Out)
  2. SSTF (Shorted Seek Time First)
  3. SCAN
  4. C-SCAN
  5. LOOK (Elevator)
  6. C-LOOK

Example for Disk Arm Scheduling Algorithm

- Consider an imaginary disk with 51 cylinders. A request comes in to read a block on cylinder 11. While the seek to cylinder 11 is in progress, new requests come in for cylinders 1, 36, 16, 34, 9, and 12, in that order.
- Starting from the current head position, what is the total distance (in cylinders) that the disk arm moves to satisfy all the pending requests, for each of the following disk scheduling Algorithms?
  1. FCSC (First Come First Serve) / FIFO (First In First Out)
  2. SSTF (Shortest Seek Time First)
  3. SCAN
  4. C-SCAN
  5. LOOK (Elevator)
  6. C-LOOK

FCSC (First Come First Serve) / FIFO (First In First Out)

- Here **requests are served in the order of their arrival**.

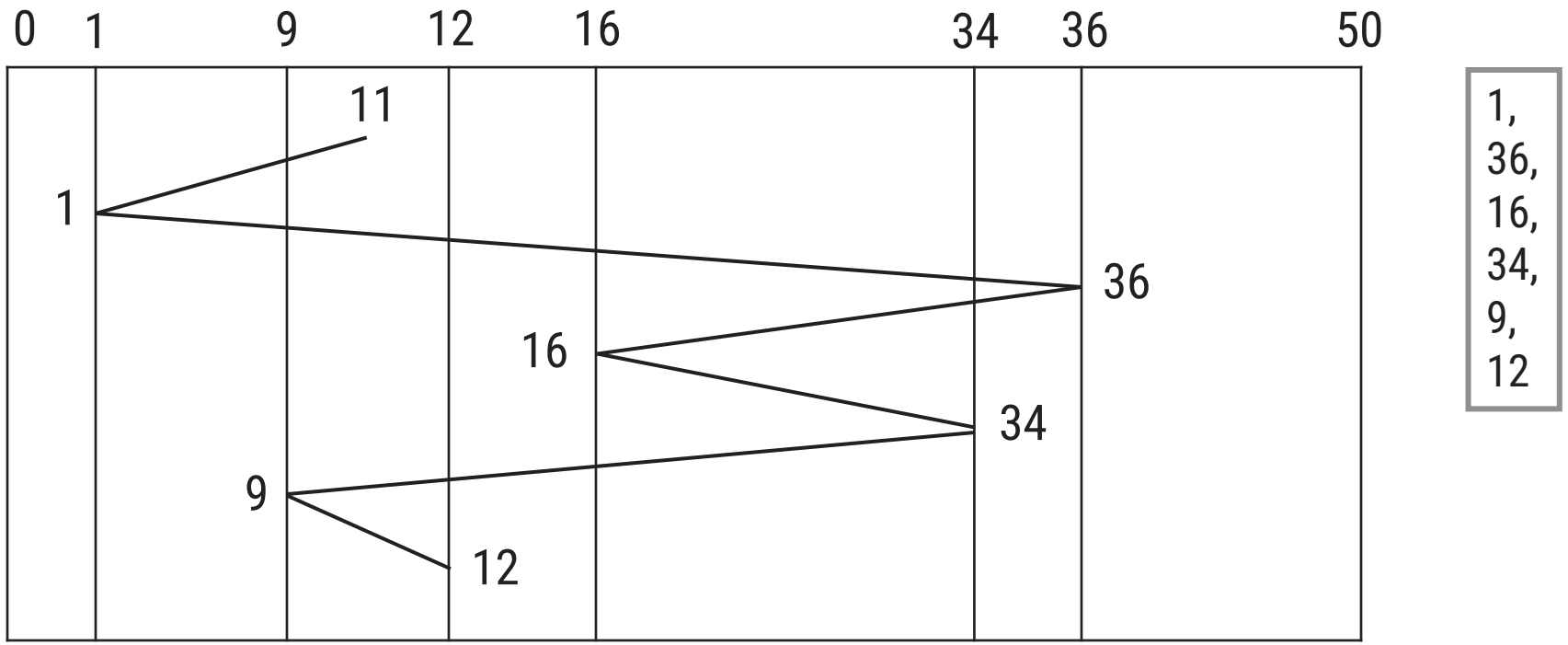

1,
36,
16,
34,
9,
12

- Disk movement will be 11, 1, 36, 16, 34, 9 and 12.
- Total cylinder movement: (11-1) + (36-1) + (36-16) + (34-16) + (34-9) + (12-9) = 111

SSTF (Shortest seek time first)

- We can minimize the disk movement by serving the **request closest to the current position of the head**.

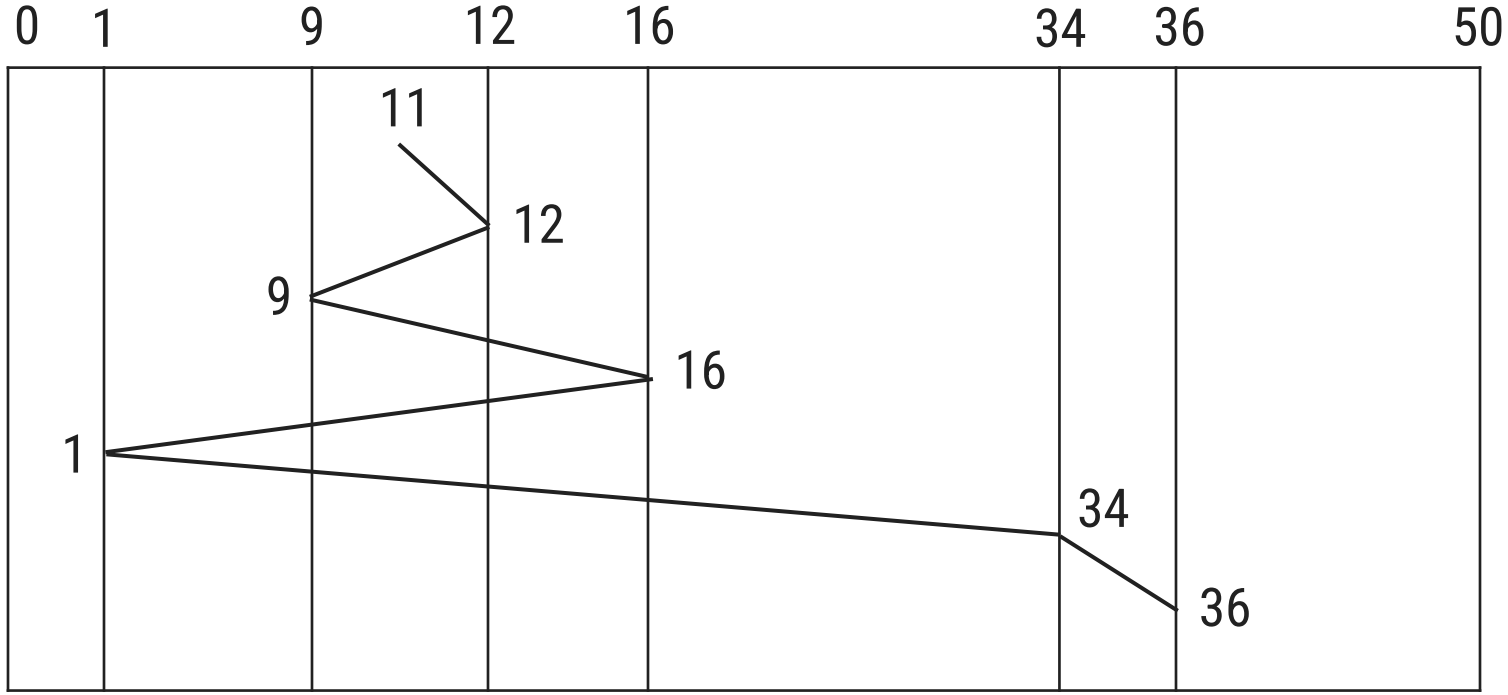

1,
36,
16,
34,
9,
12

- Disk movement will be 11, 12, 9, 16, 1, 34 and 36.
- Total cylinder movement: (12-11) + (12-9) + (16-9) + (16-1) + (34-1) + (36-34) = 61

LOOK

- Keep **moving in the same direction until there are no more outstanding requests pending** in that direction, **then algorithm switches the direction**.

- **After switching the direction the arm will move to handle any request on the way**. Here first it moves in up direction then goes in down direction.

- In this algorithm, the **software maintains 1 bit**: the current direction bit, which takes the value either UP or DOWN.

LOOK

- Here first it moves in up direction then goes in down direction

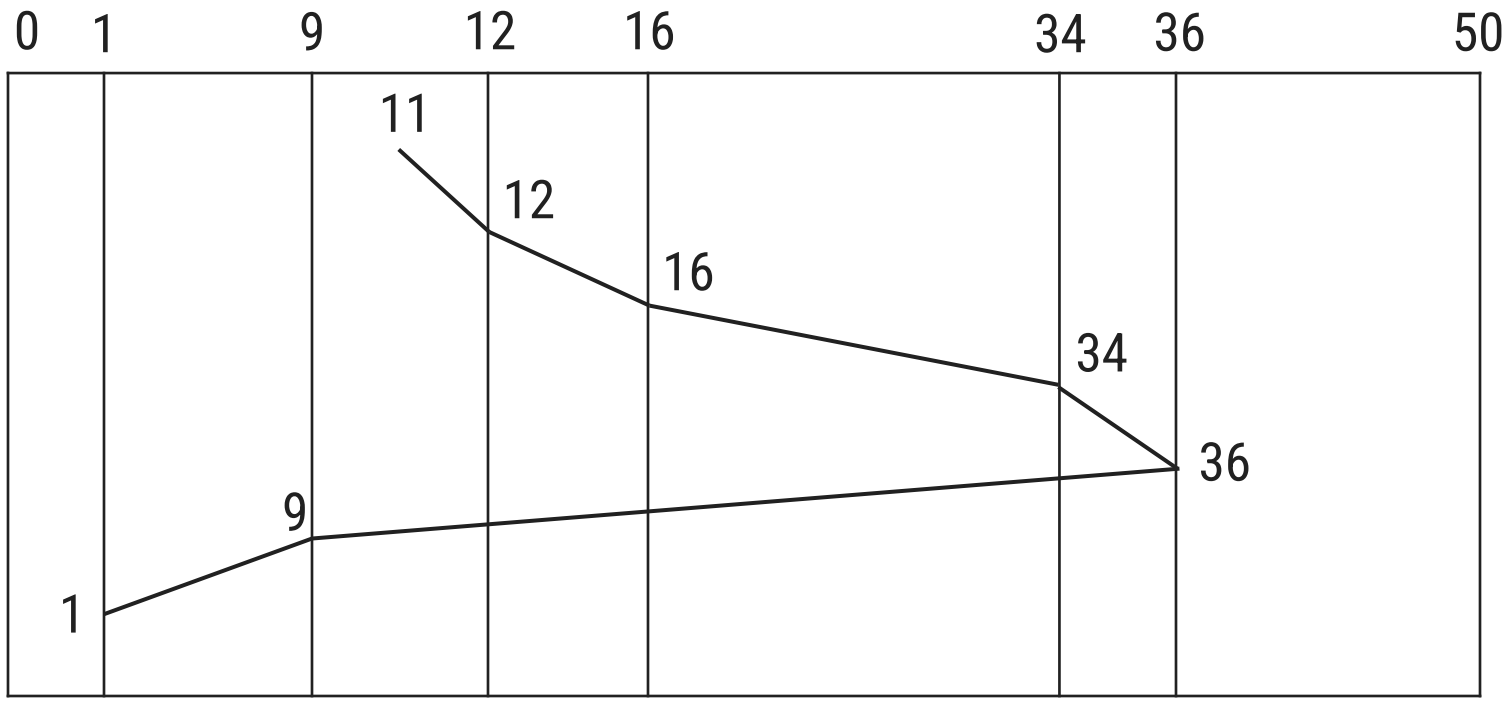

1,
36,
16,
34,
9,
12

- Disk movement will be 11, 12, 16, 34, 36, 9 and 1.
- Total cylinder movement: (12-11) + (16-12) + (34-16) + (36-34) + (36-9) + (9-1) = 60

C-LOOK

- Keep moving in the same direction until there are no more outstanding requests pending in that direction, then algorithm switches direction.
- **When switching occurs the arm goes to the lowest numbered cylinder with pending requests and from there it continues moving in upward direction again**.

C-LOOK

- Here first it moves in up direction then goes in down direction

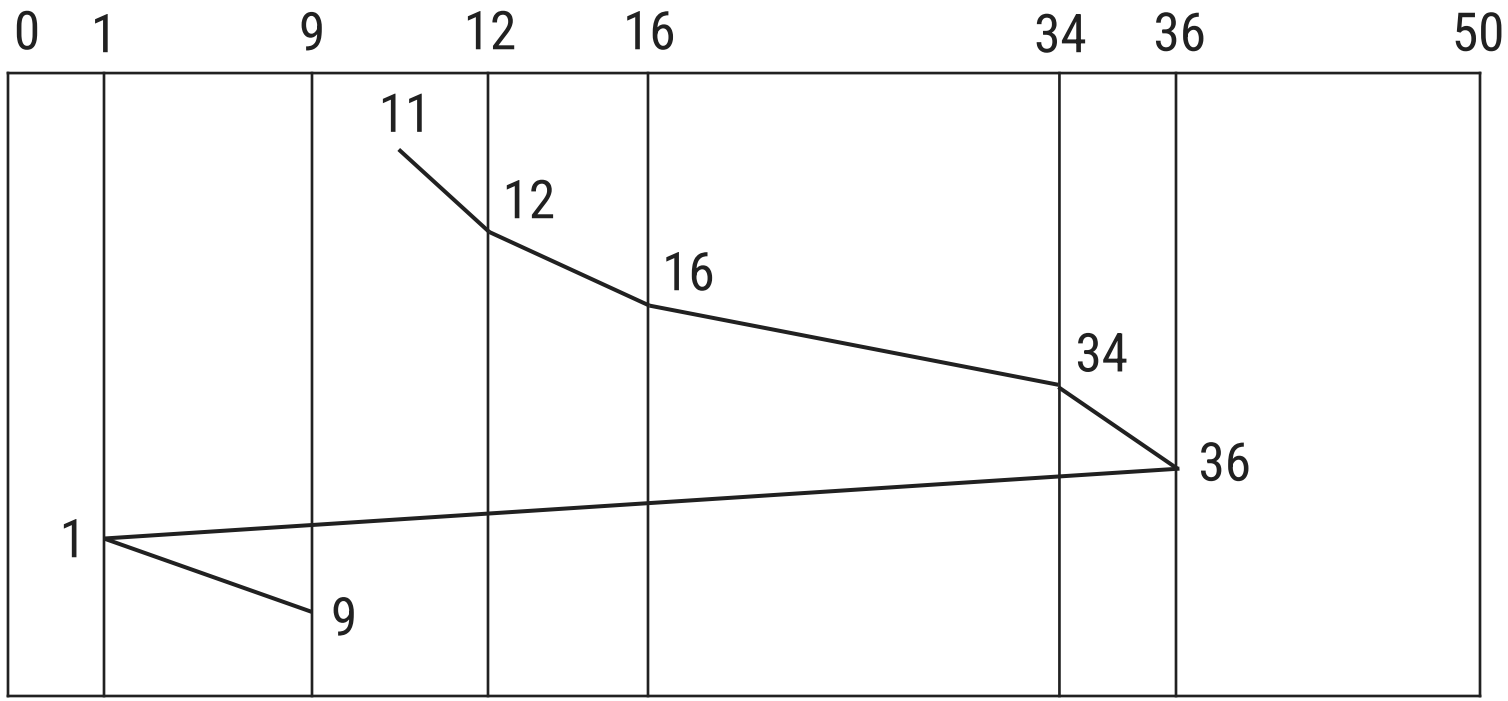

1,
36,
16,
34,
9,
12

- Disk movement will be 11, 12, 16, 34, 36, 1 and 9.
- Total cylinder movement: (12-11) + (16-12) + (34-16) + (36-34) +(36-1)+(9-1) = 68

SCAN

- **From the current position disk arm starts in up direction and moves towards the end**, serving all the pending requests until end.
- At that end arm **direction is reversed (down) and moves towards the other end serving the pending requests on the way**.
- This is also called as **elevator algorithm**.

SCAN

- Here first it moves in up direction then goes in down direction

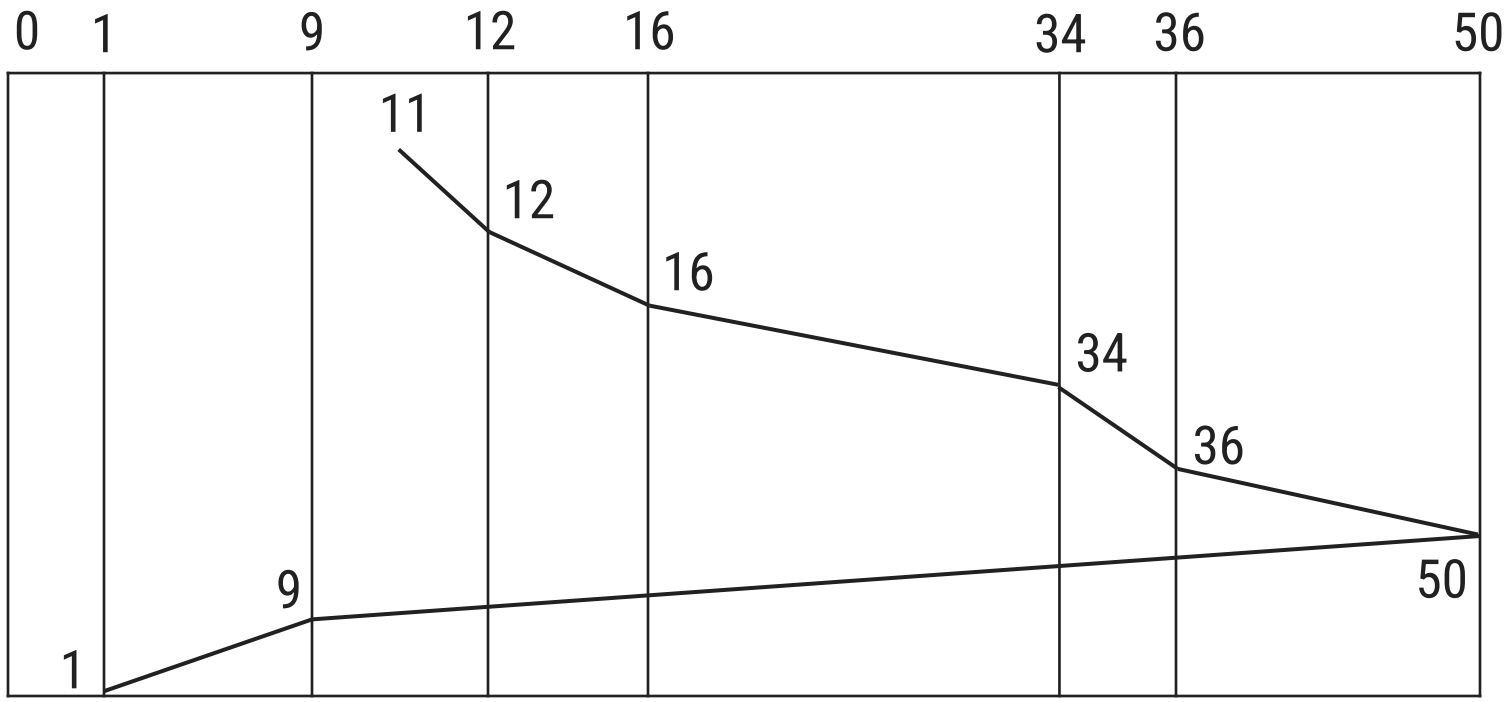

1,
36,
16,
34,
9,
12

- Disk movement will be 11, 12, 16, 34, 36, 50, 9 and 1.
- Total cylinder movement: (12-11) + (16-12) + (34-16) +(36-34) +(50-36) + (50-9) + (9-1) = 88

C-SCAN

- **From the current position disk arm starts in up direction and moves towards the end**, serving request until end.
- At the end the arm **direction is reversed (down), and arm directly goes to other end and again continues moving in upward direction**.

C-SCAN

- Here first it moves in up direction then goes in down direction

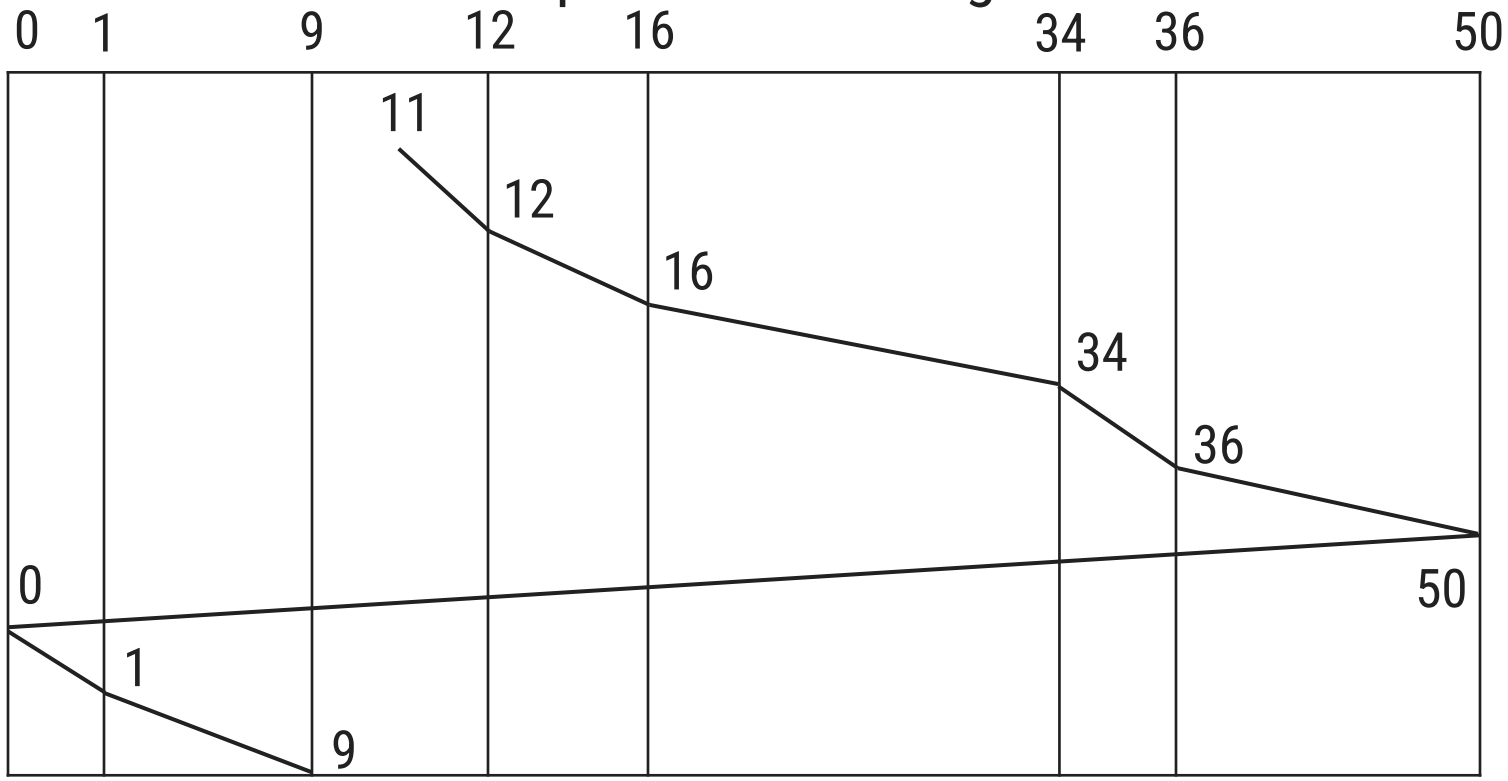

1,
36,
16,
34,
9,
12

- Disk movement will be 11, 12, 16, 34, 36, 50, 0, 1 and 9.
- Total cylinder movement: (12-11) + (16-12) + (34-16) +(36-34) +(50-36) + (50-0) + (1-0)+ (9-1) = 98

Example for Disk Arm Scheduling Algorithm [Exercise]

- Suppose that a disk drive has 200 cylinders, numbered 0 to 199 and order of request is: (82,170,43,140,24,16,190). And current position of Read/Write head is : 50.
- Starting from the current head position, what is the total distance (in cylinders) that the disk arm moves to satisfy all the pending requests, for each of the following disk scheduling Algorithms?
  - FCFS/FIFO (642)
  - SSTF (208)
  - SCAN (332)
  - C-SCAN (391)
  - LOOK (314)
  - C-LOOK (341)

RAID

RAID

- RAID (**Redundant Array of Independent Disks**)

- RAID is a **data storage virtualization technology that combines multiple physical disk drive components into a single logical unit for the purposes of data redundancy, performance improvement, large storage capacity or all**.

- **Data is distributed across the drives** in one of several ways, referred to as RAID levels, depending on the required level of redundancy and performance.

- All RAID have the property that the **data are distributed over drives, to allow parallel operation**.
- There are **7 levels of RAID**.

RAID 0 (Striping)

- It **splits data (file) into blocks of data**.
- **Stripe the blocks across disks** in the system.
- In the diagram to the right, the **odd blocks are written to disk 1 and the even blocks to disk 2**.
- It is **easy to implement**.
- **No parity calculation** overhead is involved.
- It **provides good performance** by spreading the load across many channels and drives.
- It **provides no redundancy or error detection**.
- **Not true RAID because there is no fault tolerance**. The failure of just one drive will result in all data in an array being lost.
- After certain amount of drives, performance does not increase significantly.
- It **requires minimum 2 drives** to implement.

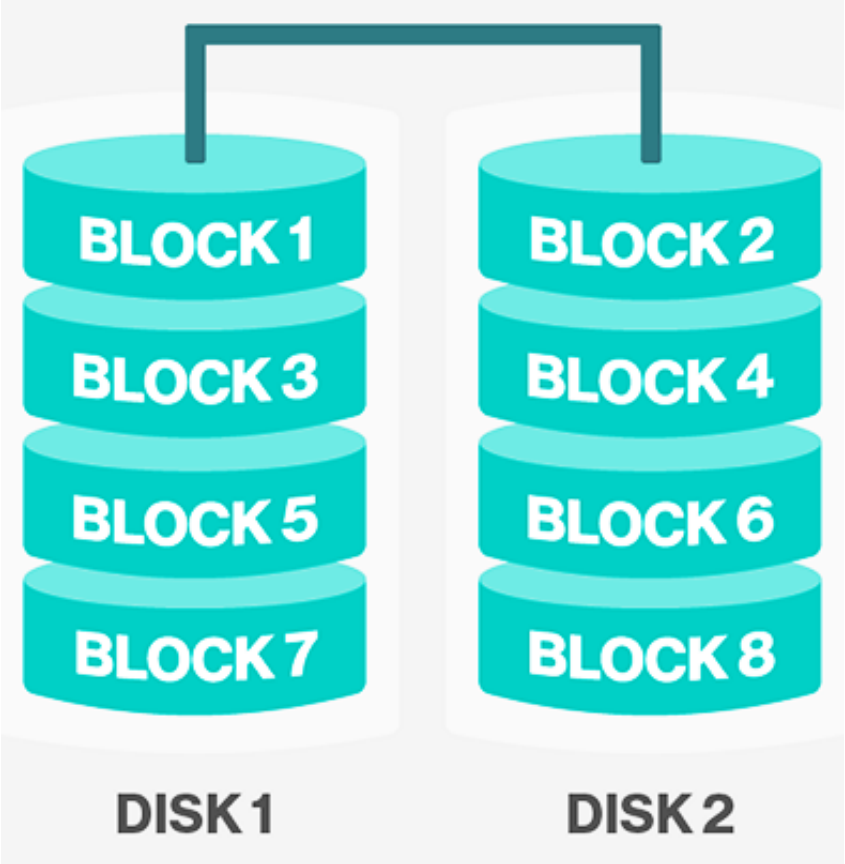

RAID 1 (Mirroring)

- A **complete file is stored on a single disk**.
- A **second disk contains an exact copy of the file**.
- It **provides complete redundancy** of data.
- **Read** performance can be **improved**
  - same file data can be read in parallel
- **Write** performance **suffers**
  - must write the data out twice
- **Most expensive** RAID implementation.
- It **requires twice as much storage space**.
- In case a **drive fails, data do not have to be rebuild**, they just have to be copied to the replacement drive.
- The main **disadvantage is that the effective storage capacity is only half of the total drive capacity** because all data get written twice.

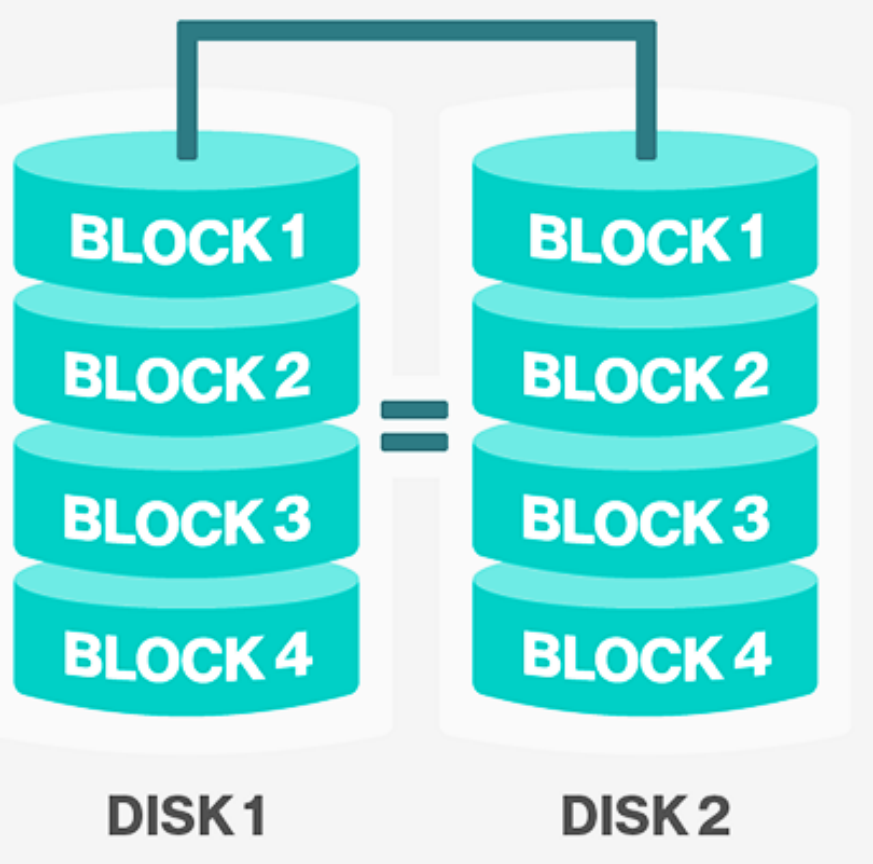

RAID 2 (Bit-level striping using a Hamming Code parity)

- It **stripes data at bit level (rather than block level) with some disks storing error checking and correcting (ECC) information**.

- It **uses ECC (Error Correcting Code)** to monitor correctness of information on disk.
- A **parity disk is then used to reconstruct corrupted or lost data**.

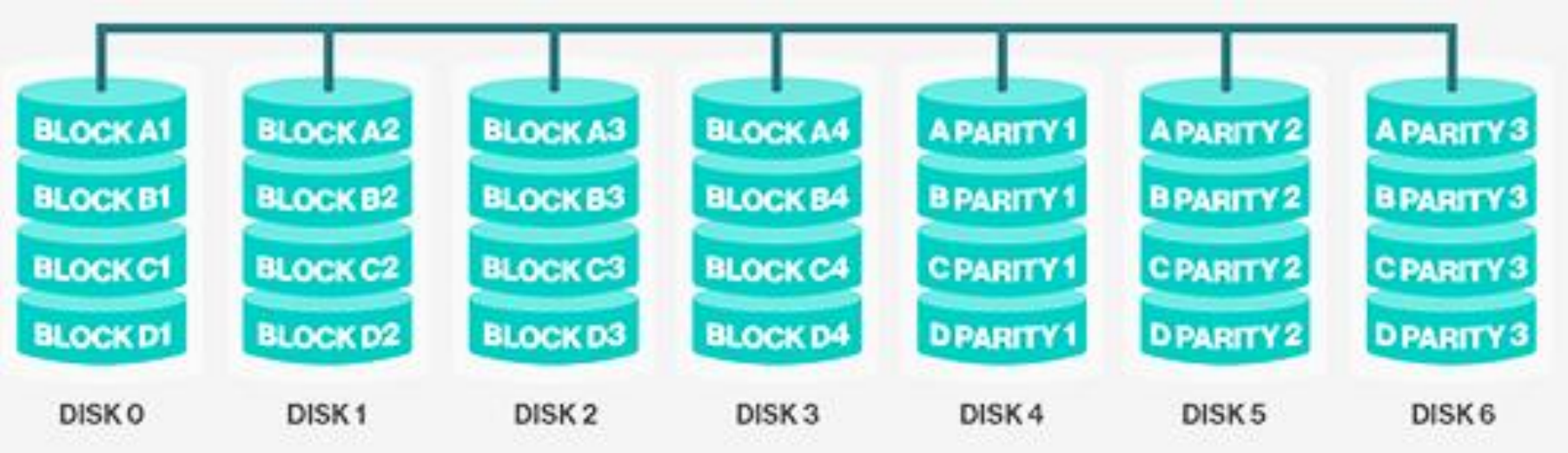

RAID 2 (Bit-level striping using a Hamming Code parity)

- Imagine **splitting each byte into a pair of 4-bit nibbles, then adding Hamming code to each one to form a 7-bit word, of which bit 1, 2 and 4 were parity bits**.
- In RAID 2 **each of seven drives needs synchronized** in terms of arm position and rotational position, and then it would be possible to write the 7-bit Hamming coded word over the seven drives.
- Here, **losing one drive did not cause problem**, which can be handled by Hamming code on the fly.
- Big problem is performance
  - must have to **read data plus ECC code** from other disks
  - for a **write, must have to modify data, ECC, and parity disks**

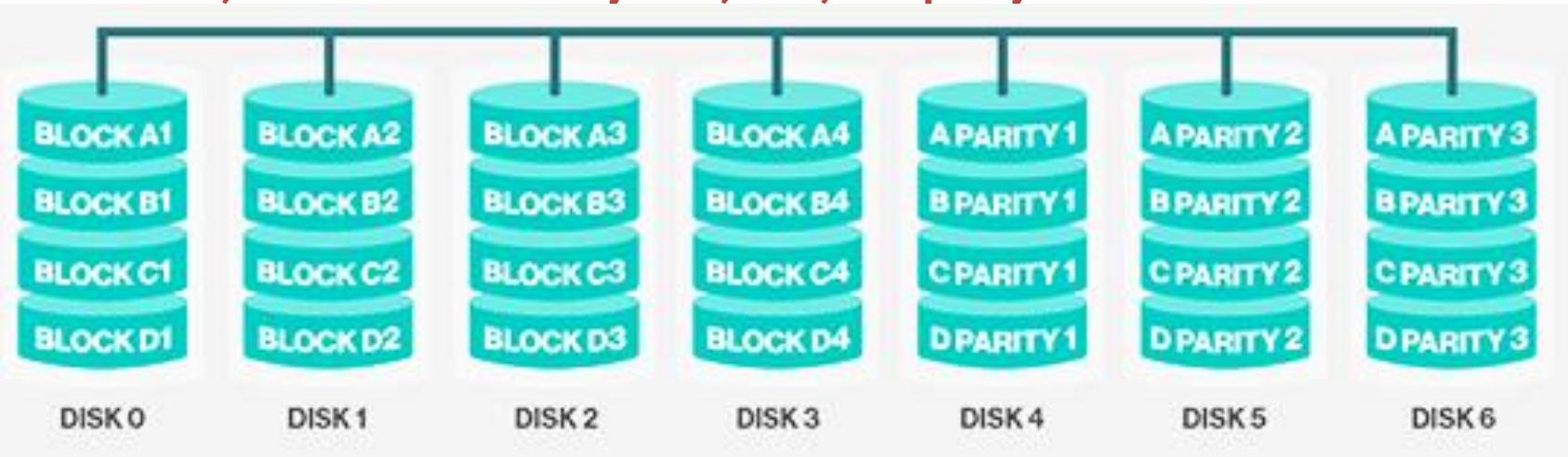

RAID 3 (Byte-level striping with a dedicated parity)

- It uses **striping and dedicates one drive for storing parity information**.
- Here **single parity bit is computed for each data word and written to a parity drive**.
- The **embedded ECC information is used to detect errors**.
- As in RAID level 2 the **drives must be exactly synchronized**.

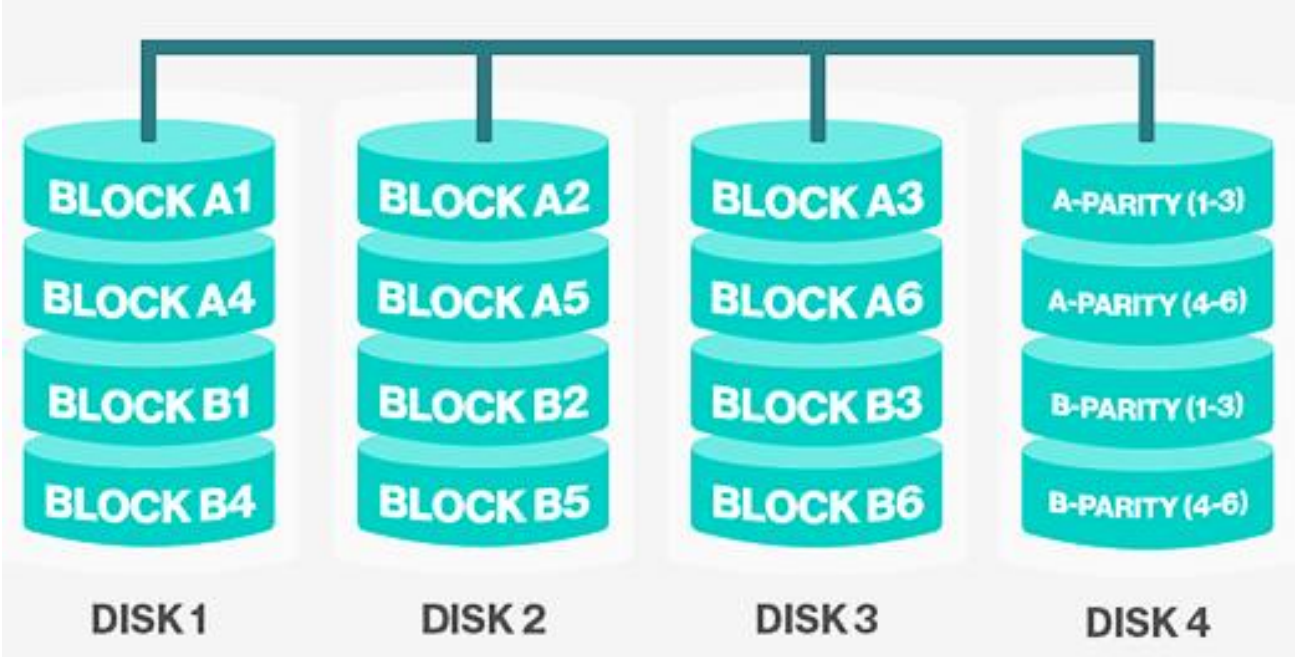

RAID 4 (Block-level striping with dedicated parity)

- It **uses large stripes (block level striping), which means you can read records from any single drive**.
- They **do not require synchronization of drives**.
- RAID 4 is like RAID 0, with strip-for-strip parity written onto an extra drive.
- If **a drive crashes, the lost bytes can be recomputed from the parity drive** by reading the entire set of drives.
- This design protects against the loss of a drive but performs poorly for small updates, if one sector is changed, it is necessary to read all the drives in order to recalculate the parity.
- It **creates heavy load** on parity drive.

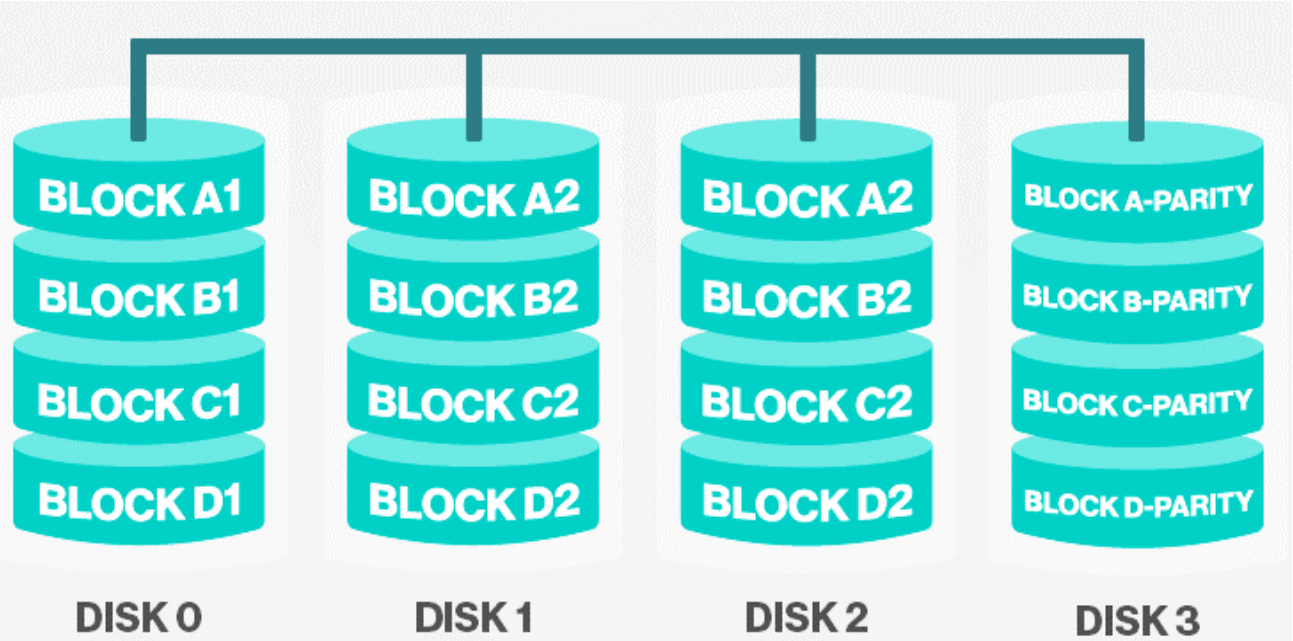

RAID 5 (Block-level striping with distributed parity)

- This level is **based on block-level striping with parity**.
- The **parity information is striped across each drive**.
- As with RAID level 4, there is a heavy load in the parity drive, it may become bottleneck.
- This **bottleneck can be eliminated in RAID level 5 by distributing the parity bits uniformly over all the drives**.

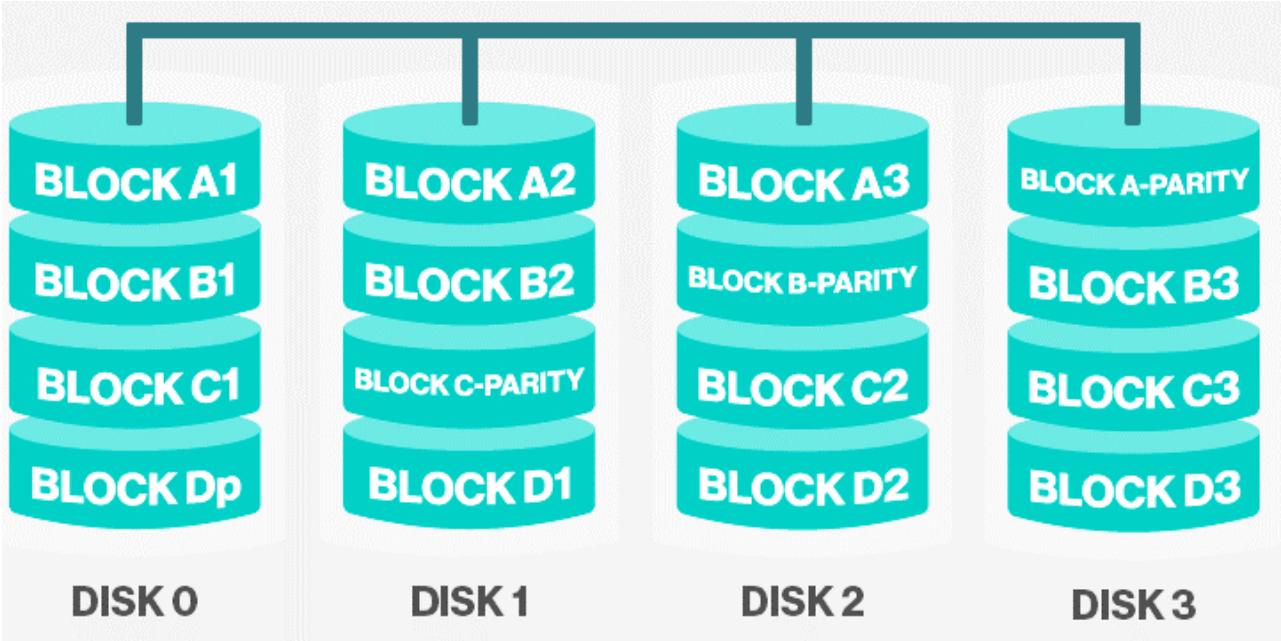

Disk Cache

Disk Cache

- A disk cache is a **mechanism for improving the time it takes to read from or write to a hard disk**.
- A disk cache can also be a **specified portion of random access memory (RAM)** for disk sectors.
- The disk cache holds data that has recently been read and, in some cases, adjacent data areas that are likely to be accessed next.

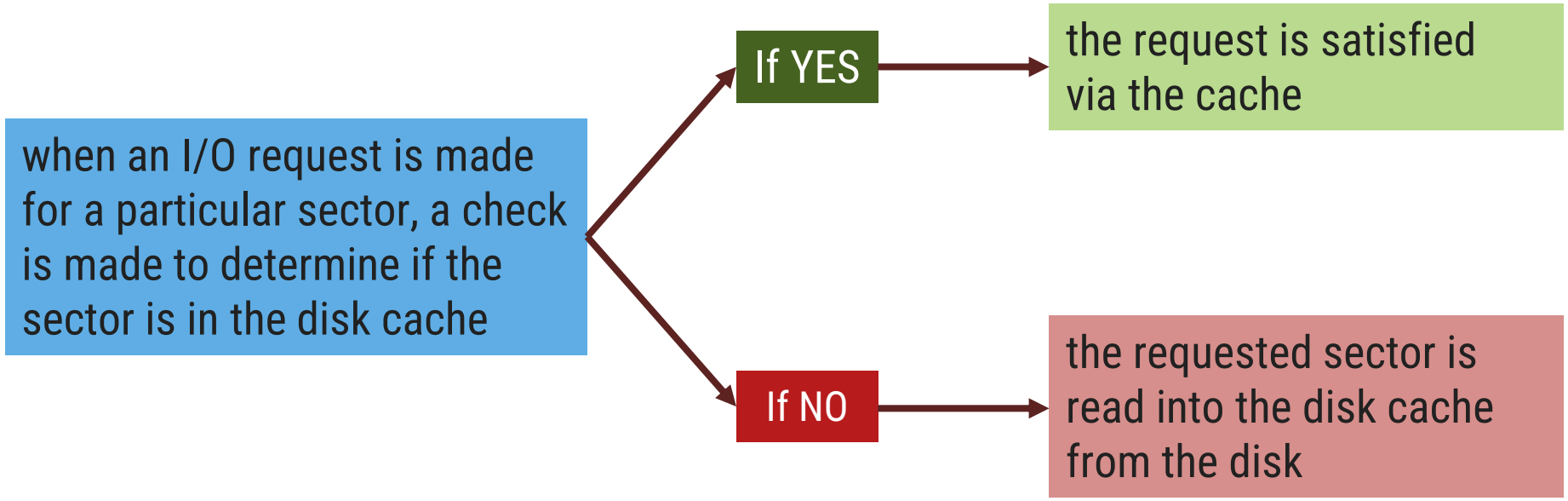

I/O devices

I/O devices

- External devices that engage in I/O with computer systems can be grouped into 3 categories:
  1. **Human readable**, suitable for communicating with the computer user.
     Examples: printers, terminals, video display, keyboard, mouse
  2. **Machine readable**, suitable for communicating with electronic equipment.
     Examples: disk drives, USB keys, sensors, controllers
  3. **Communication**, suitable for communicating with remote devices.
     Examples: modems, digital line drivers
- Devices differ in a number of areas:
  1. **Data Rate**: there may be differences of magnitude between the data transfer rates
  2. **Application**: the use to which a device is put has an influence on the software
  3. **Complexity of Control**: the effect on the operating system is filtered by the complexity of the I/O module that controls the device
  4. **Unit of Transfer**: data may be transferred as a stream of bytes or characters or in larger blocks
  5. **Data Representation**: different data encoding schemes are used by different devices
  6. **Error Conditions**: the nature of errors, the way in which they are reported, their consequences, and the available range of responses differs from one device to another

Organization of I/O functions

Organization of I/O functions

- Three techniques for performing I/O are:
  1. **Programmed I/O**, the **processor issues an I/O command on behalf of a process** to an I/O module; that **process then busy waits for the operation to be completed** before proceeding.

  2. **Interrupt-driven I/O**, the **processor issues an I/O command on behalf of a process**
     - **if non-blocking – processor continues to execute instructions** from the process that issued the I/O command
     - **if blocking – the next instruction the processor executes is from the OS**, which will put the current process in a blocked state and schedule another process

  3. **Direct Memory Access (DMA)**, a **DMA module controls the exchange of data** between main memory and an I/O module

Evolution of I/O functions

1. Processor directly controls a peripheral device
2. A controller or I/O module is added
3. Same configuration as step 2, but now interrupts are employed
4. The I/O module is given direct control of memory via DMA
5. The I/O module is enhanced to become a separate processor, with a specialized instruction set tailored for I/O
6. The I/O module has a local memory of its own and is, in fact, a computer in its own right

Direct Memory Access

- Feature of computer systems that **allows certain hardware subsystems to access main memory (RAM), independent of the central processing unit (CPU)**.
- Without DMA, when the CPU is using programmed input/output, it is typically fully occupied for the entire duration of the read or write operation, and is thus unavailable to perform other work.
- With DMA, the **CPU first initiates the transfer, then it does other operations while the transfer is in progress**, and it finally **receives an interrupt from the DMA controller when the operation is done**.

- This **feature is useful when the CPU needs to perform useful work while waiting for a relatively slow I/O data transfer**.
- Many hardware systems such as **disk drive controllers, graphics cards, network cards and sound cards use DMA**.

Disk read-write without a DMA

- The **disk controller reads the block from the drive serially**, bit by bit, **until the entire block is in the controller's buffer**.
- Next, it **computes the checksum** to verify that no read errors have occurred.
- Then the **controller causes an interrupt**, so that OS can read the block from controller's buffer (a byte or a word at a time) by executing a loop.
- **After reading every single part of the block** from controller device register, the **operating system will store them into the main memory**.

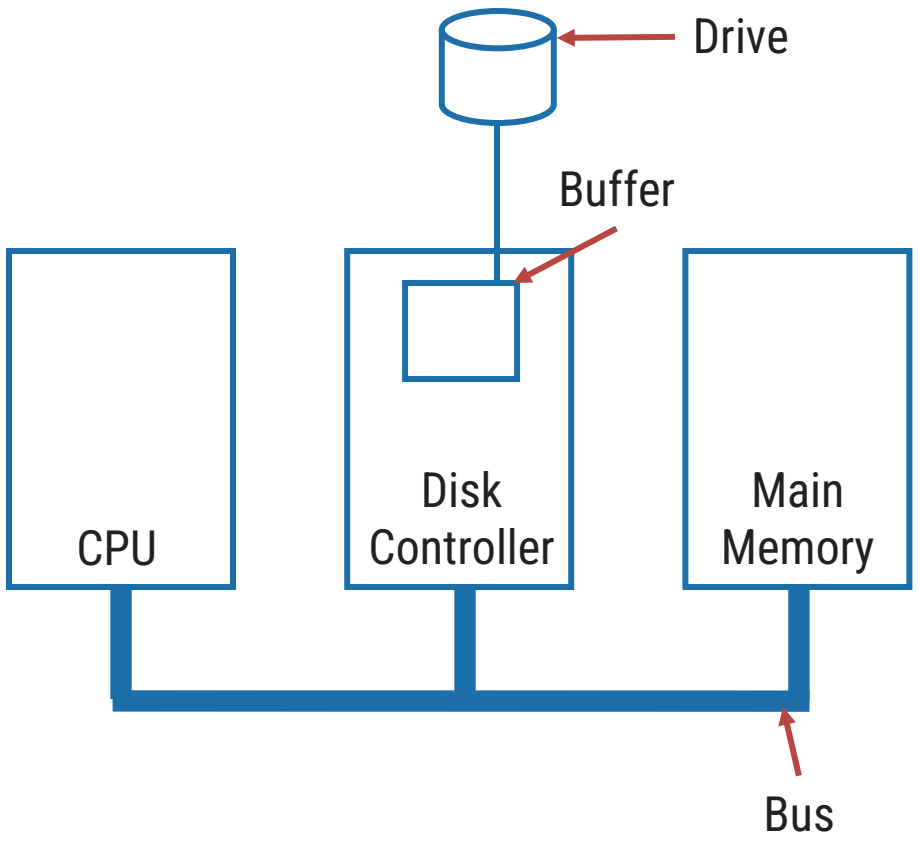

Disk read-write using DMA

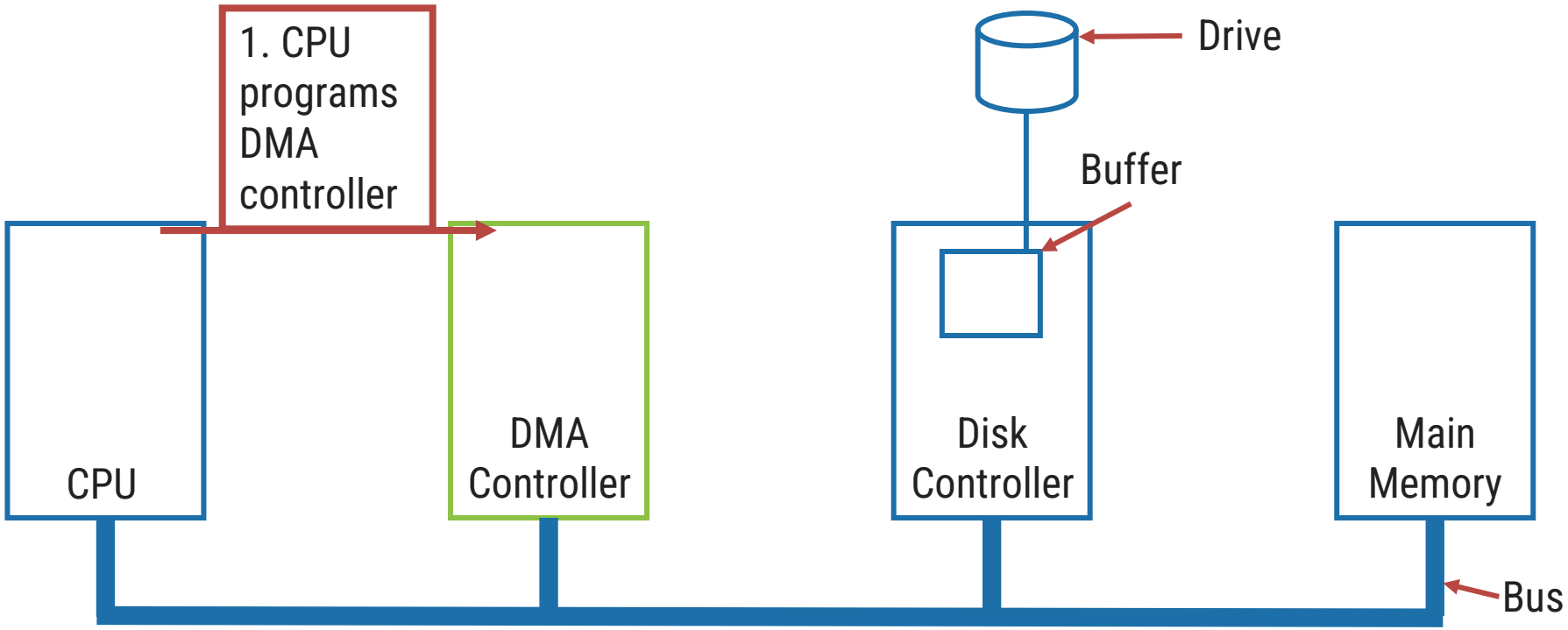

- Step 1: First the CPU programs the DMA controller by setting its registers so it knows what to transfer where.
- It also issues a command to the disk controller telling it to read data from the disk into its internal buffer and verify the checksum.
- When valid data are in the disk controller's buffer, DMA can begin.

Disk read-write using DMA

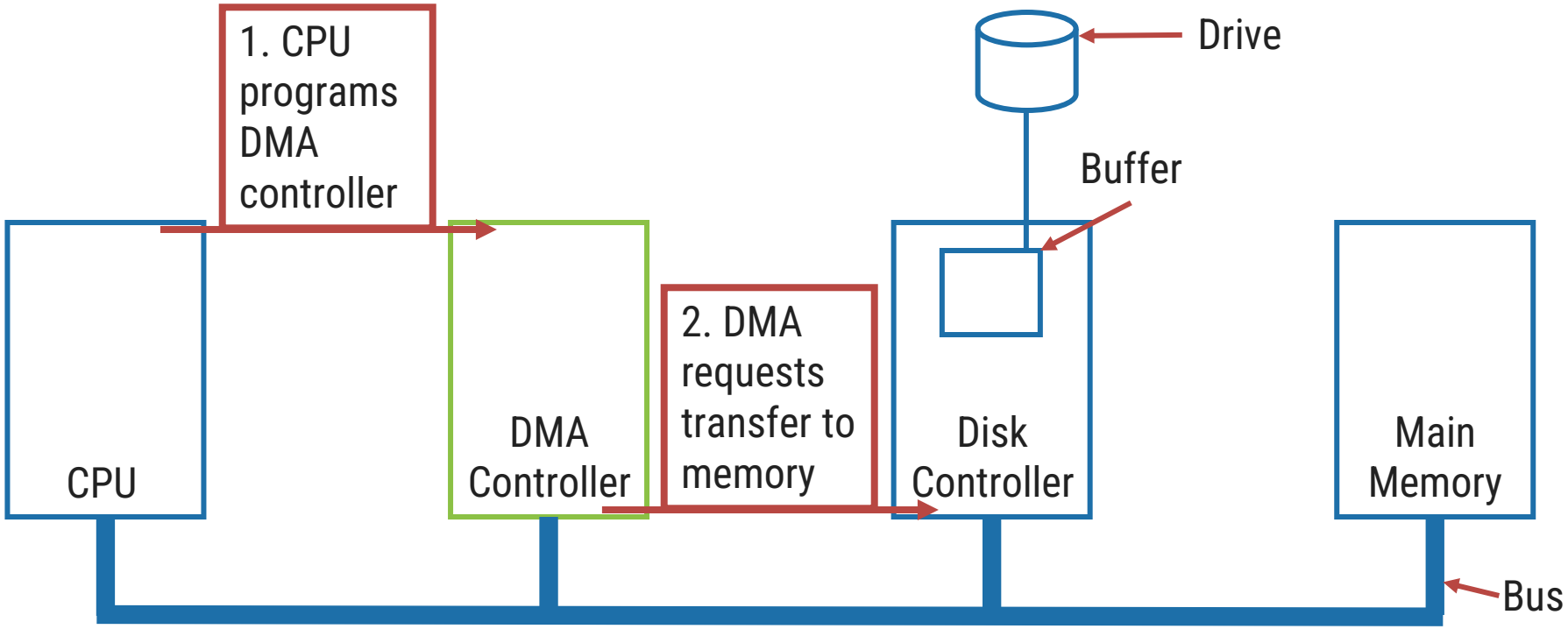

- Step 2: The DMA controller initiates the transfer by issuing a read request over the bus to the disk controller.
- This read request looks like any other read request, and the disk controller does not know (or care) whether it came from the CPU or from a DMA controller.

Disk read-write using DMA

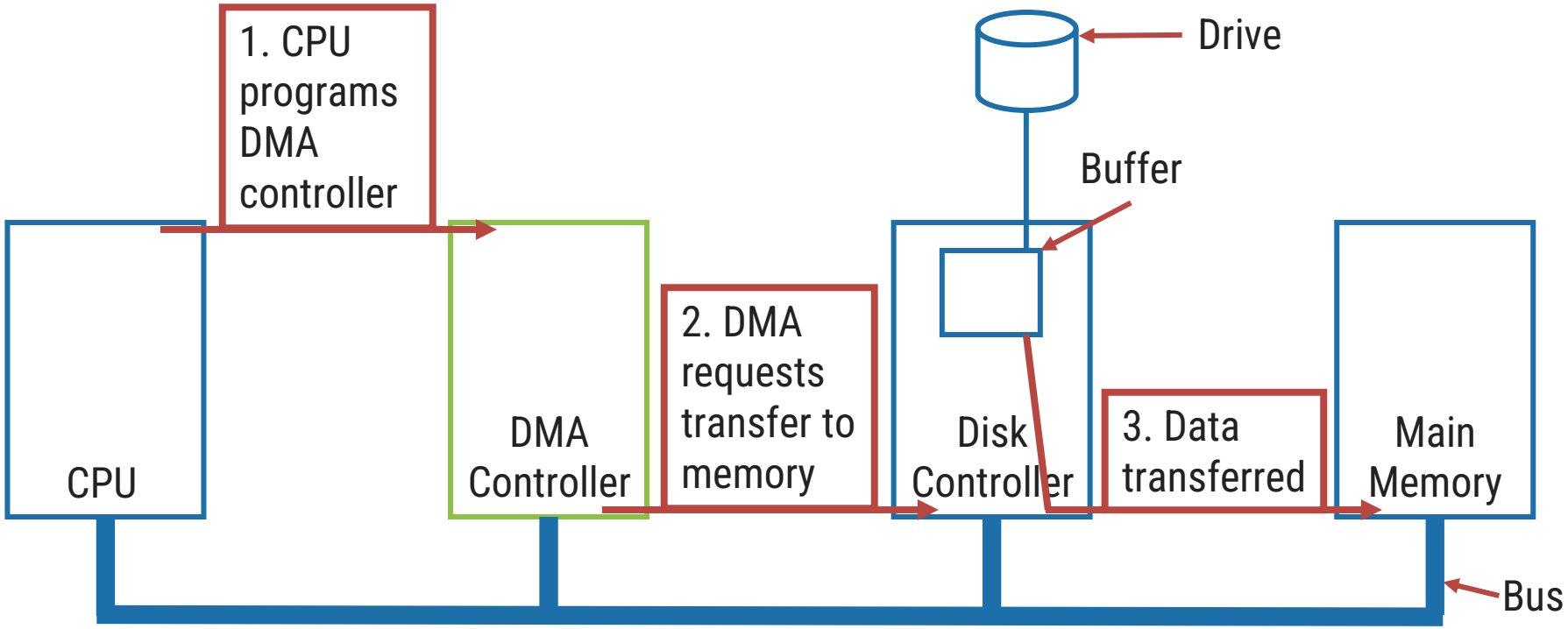

- Typically, the memory address to write to is on the bus' address lines, so when the disk controller fetches the next word from its internal buffer, it knows where to write it.
- Step 3: The write to memory is another standard bus cycle.

Disk read-write using DMA

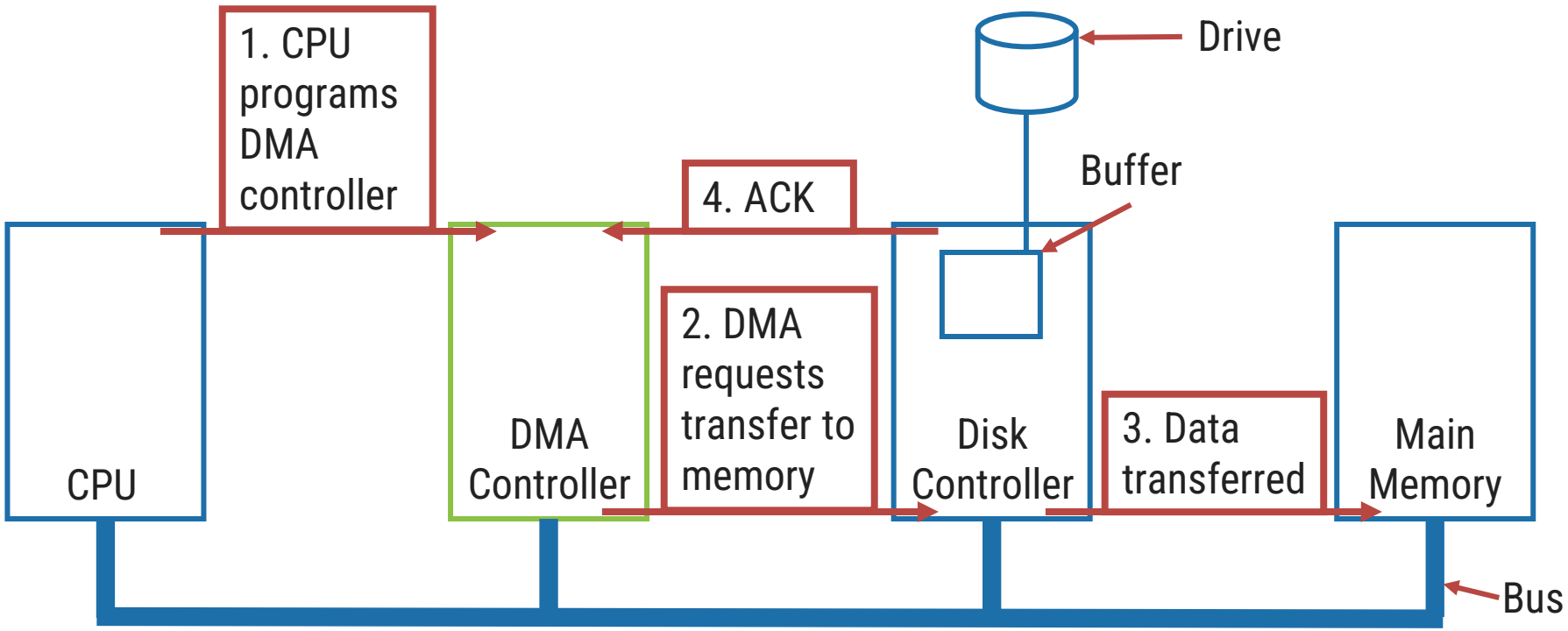

- Step 4: When the write is complete, the disk controller sends an acknowledgement signal to the DMA controller, also over the bus.
- The DMA controller then increments the memory address to use and decrements the byte count.
- If the byte count is still greater than 0, steps 2 to 4 are repeated until it reaches 0.

Disk read-write using DMA

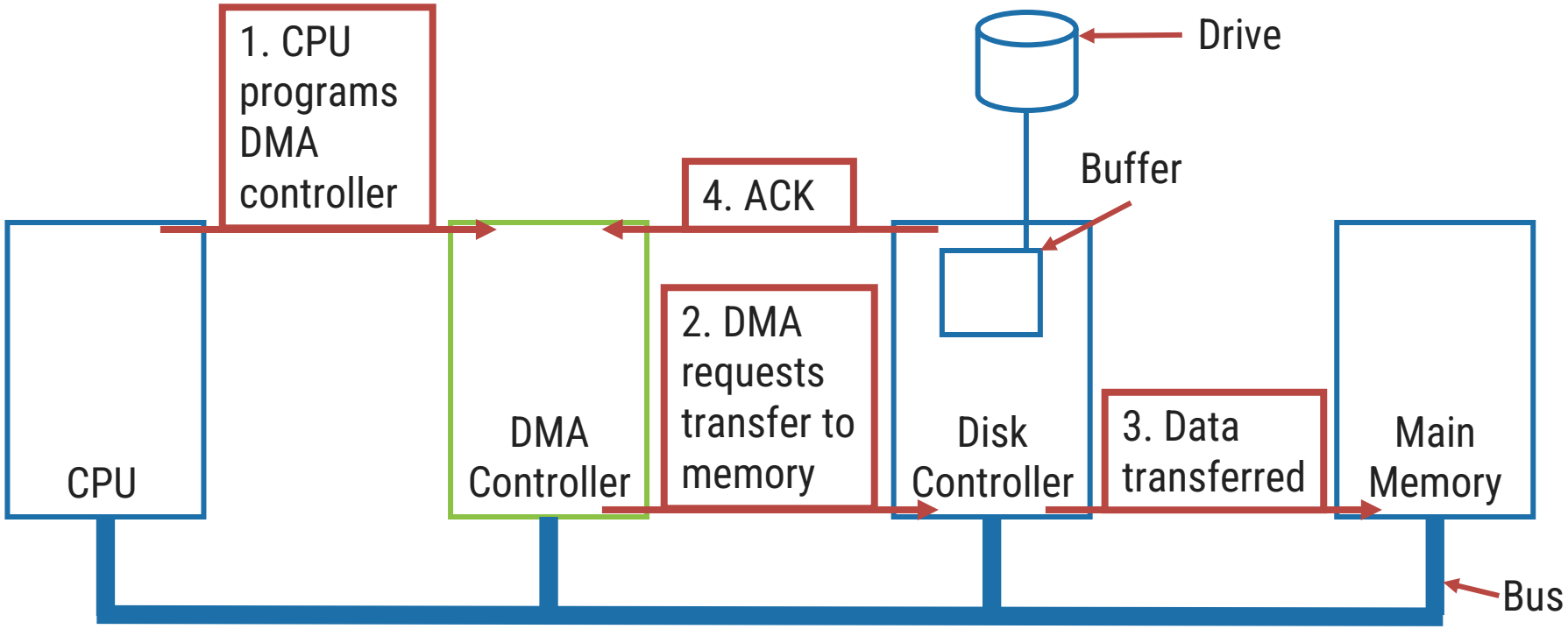

- At that time, the DMA controller interrupts the CPU to let it know that the transfer is now complete.
- When the OS starts up, it does not have to copy the disk block to memory; it is already there.

Operating System Design issues

Operating System Design issues

- Design objectives: Two objectives are paramount in designing the I/O facility.
  1. Efficiency
     - Efficiency is important because I/O operations often **form a bottleneck** in a computing system.
     - Most **I/O devices are extremely slow** compared with main memory and the processor.
  2. Generality
     - It is desirable to **handle all devices in a uniform manner**.
     - Applies to the **way processes view I/O devices** and the **way the operating system manages I/O devices** and operations.
     - **Because of the diversity of device characteristics**, it is **difficult in practice to achieve true generality**.
     - What can be done is to **use a hierarchical**, **modular approach** to the design of the I/O function.
     - This approach **hides most of the details of device I/O** in lower-level routines so that user processes and upper levels of the OS see devices in terms of **general functions, such as read, write, open, close, lock, and unlock**.

I/O Buffering

Buffering

- **Perform input transfers in advance** of requests being made and **perform output transfers some time after** the request is made is called buffering.
- Types of I/O devices:
  - **Block oriented**: A block-oriented device **stores information in blocks** that are usually of **fixed size**, and **transfers are made one block at a time**.

    Generally, it is possible to reference data by its block number.

    Hard disks, floppy disks and optical drives such as DVD-ROM and CD-ROM are examples of block oriented devices.

  - **Stream oriented**: A stream-oriented device **transfers data in and out as a stream of bytes**, with **no block structure**.

    Terminals, printers, communications ports, keyboard, mouse and other pointing devices, and most other devices that are **not secondary storage** are stream oriented.

I/O buffering

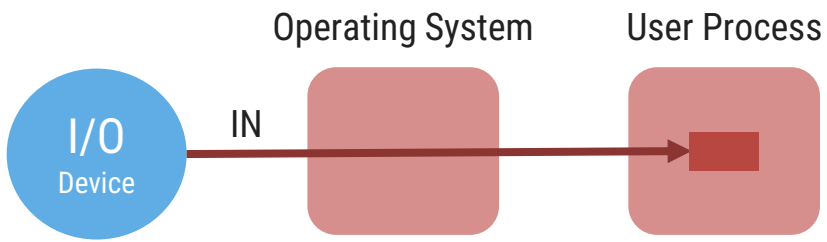

- **Without a buffer**, Operating system **directly accesses the device when it needs**

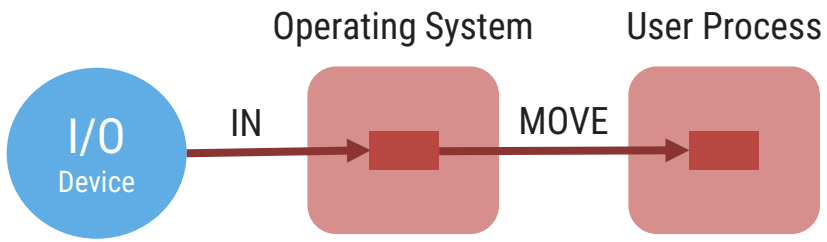

- **Single buffer**, Operating system **assigns a buffer in the main memory for an I/O request**

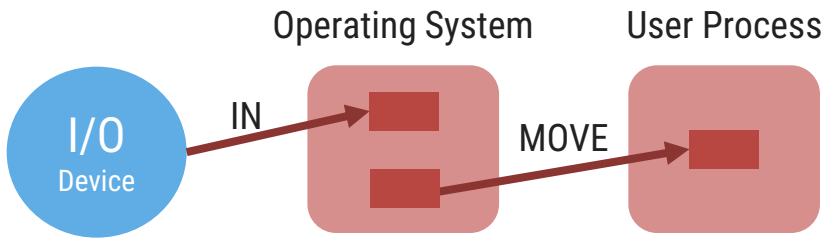

- **Double buffer**, Operating system **use two system buffers instead of one,** also known as **buffer swapping**. A **process can transfer data to or from one buffer while the operating system empties or fills the other buffer**

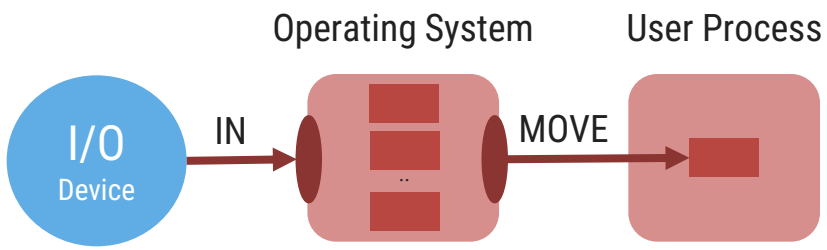

- **Circular buffer**, Operating system **uses two or more buffers. Each individual buffer is one unit in a circular buffer. Used when I/O operation must keep up with process**

Practice Questions

1. Write a short note on DMA.
2. Briefly describe all Disk Arm Scheduling Algorithm.
3. Write short note on RAID.
4. Suppose Disk drive has 300 cylinders. The current position of head is 90. The queue of pending request is 36,79,15,120,199,270,89,170 Calculate head movement for the following algorithms. 1. FCFS 2. SSTF
5. Suppose that a disk drive has 200 cylinders from 0 to 199. The drive is currently at cylinder 53 and previous request at 43. The queue of pending requests in FIFO order is 98, 183, 37, 122, 14, 124, 65, 67.Starting from the current head position what is the total distance (in cylinder) that the disk arm moves to satisfy all the pending requests for each of the following disk scheduling algorithms: FCFS, SSTF, SCAN, LOOK, CLOOK, CSCAN.

Practice Questions

6. Define seek time and rotational latency. Assume that a disk drive has 200 cylinders, numbered 0 to 199. The drive is currently serving a request at cylinder 100. The queue of pending requests is 23, 89, 132, 42, 189. Calculate seek time for FCFS and SSTF disk scheduling algorithm.
7. Suppose that a disk drive has 5000 cylinders, numbered 0 to 4999. The drive is currently serving a request at cylinder 143,. The queue of pending requests, in FIFO order,86, 1470, 913, 1774, 948, 1509, 1022, 1750, 130Starting from current head position what is total distance (in cylinders) that disk arm moves to satisfy all the pending request for FCFS and SSTF disk scheduling algorithm?

Thank You